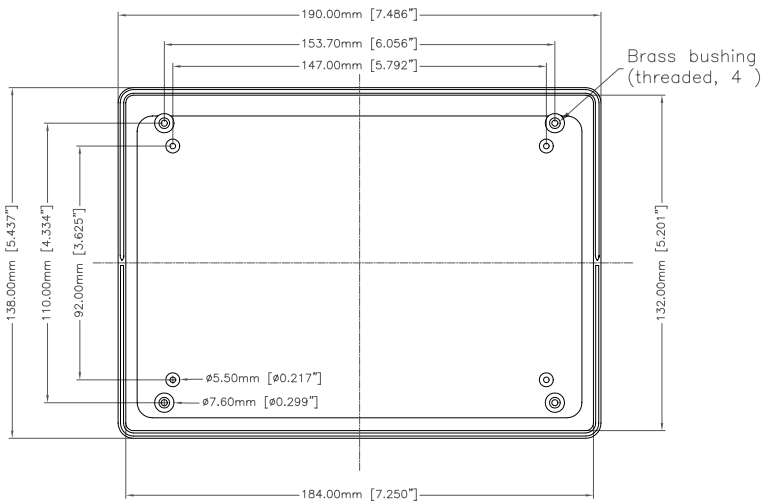

COVER INSIDE

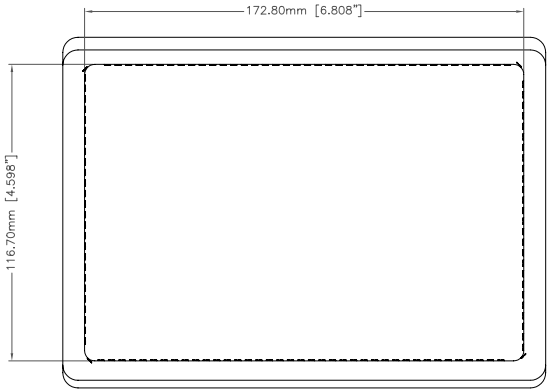

COVER OUTSIDE

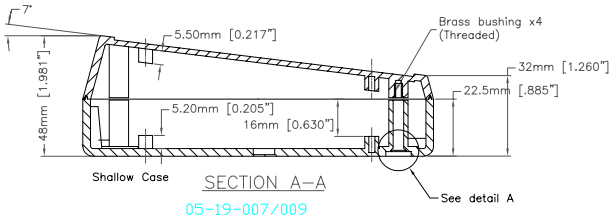

SECTION A–A
05-19-007/009
Shallow Bottom Version

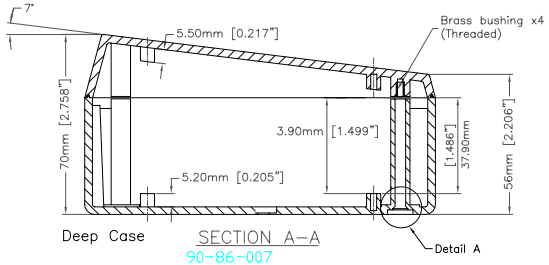

SECTION A–A
90-86-007
Deep Bottom Version

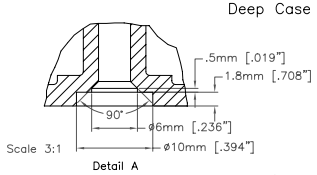

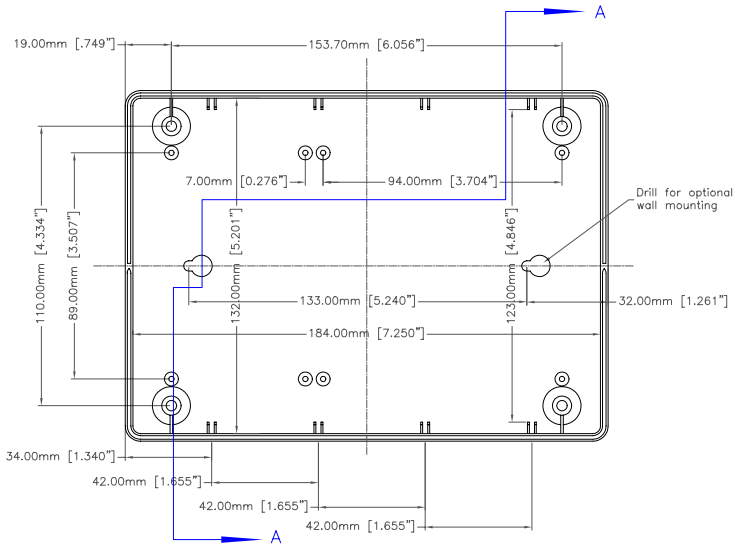

BOTTOM INSIDE

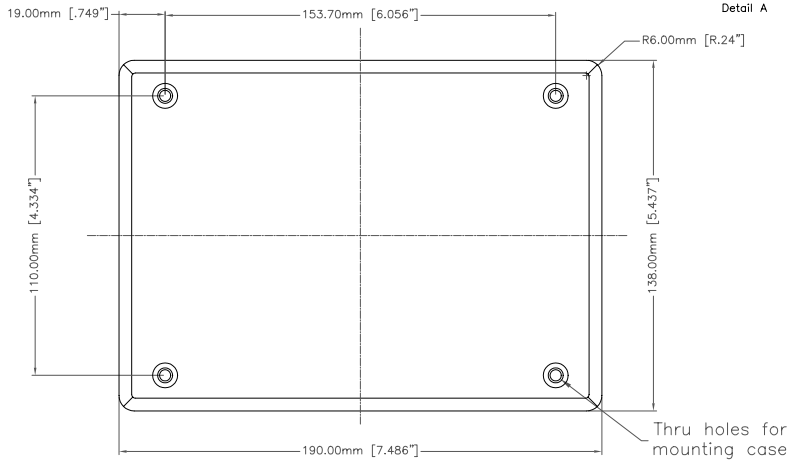

BOTTOM OUTSIDE

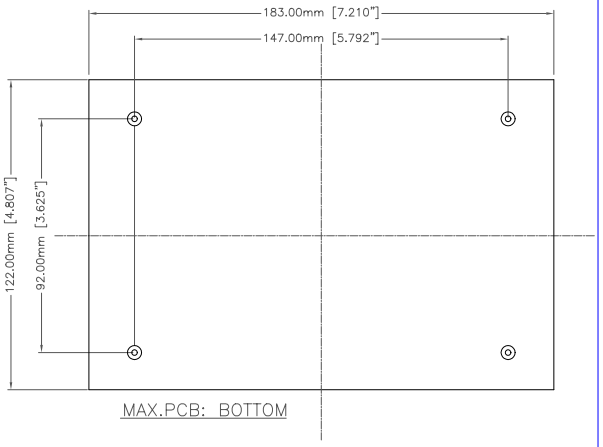

MAX.PCB: BOTTOM

Maximum size of PCB: Base 122x183mm, Top 125x183mm
(Cutout of pillars not taken into consideration)