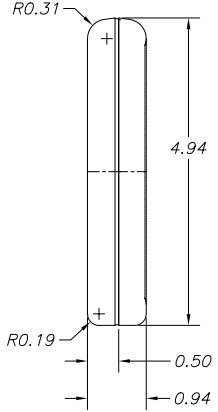

SIDE VIEW

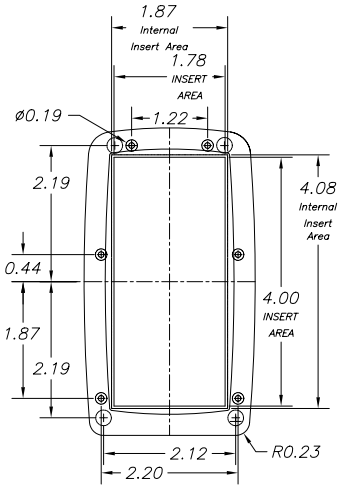

TOP VIEW

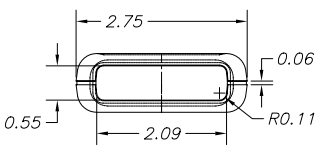

FRONT VIEW

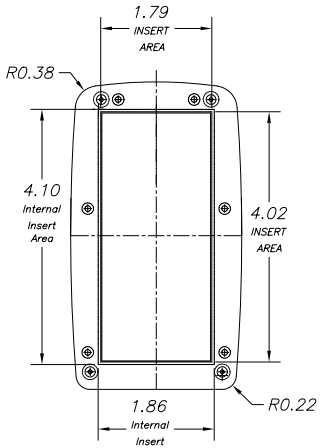

BOTTOM VIEW

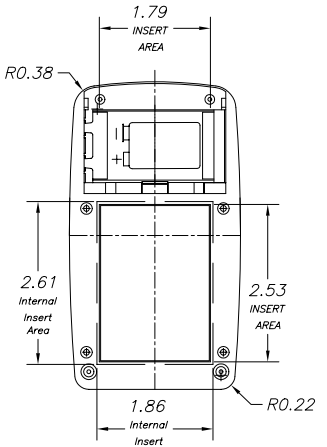

BOTTOM VIEW

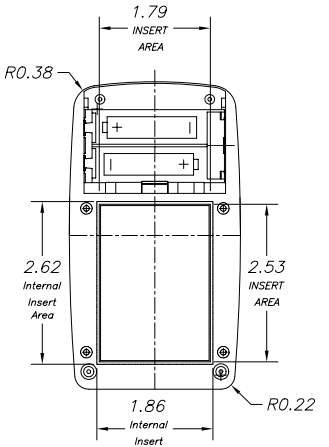

BOTTOM VIEW

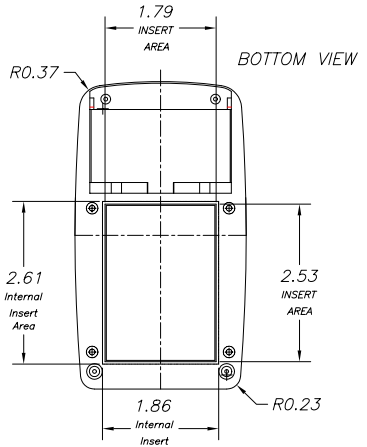

BOTTOM VIEW

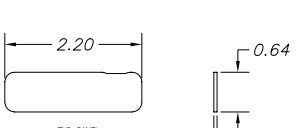

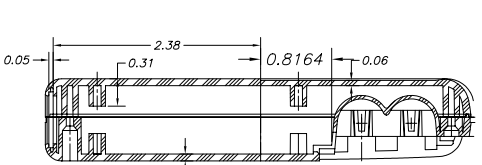

TWO AA

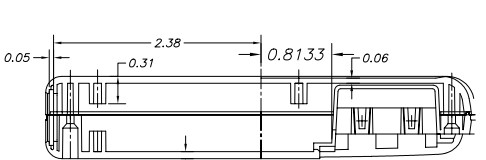

9V

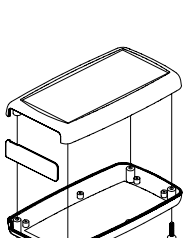

NO BATTERY COMPARTMENT

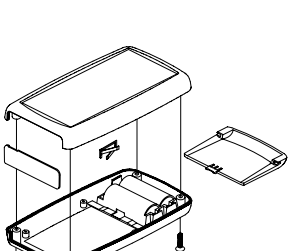

TWO AA

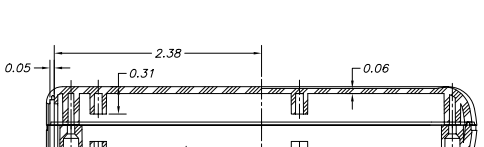

NO BATTERY COMPARTMENT