* = Conical form tapering downward.
Untoleranced dimensions per GTA 13/5 - DIN 1688

LID

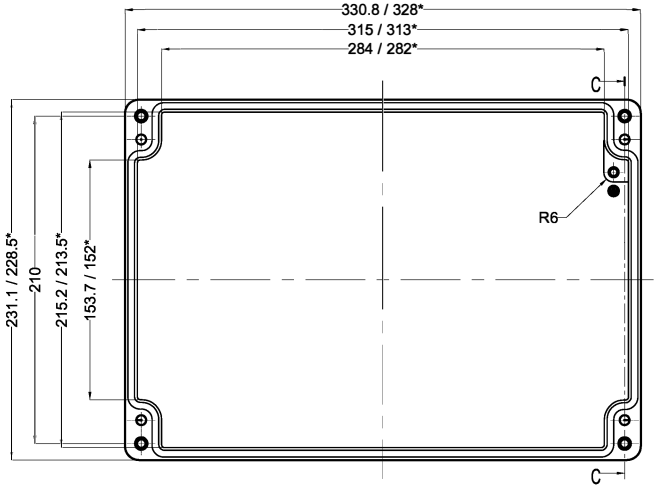

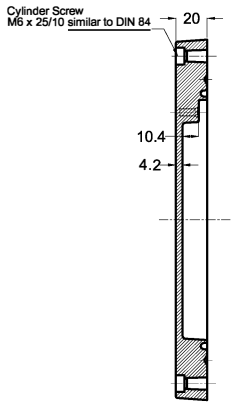

SECTION C-C

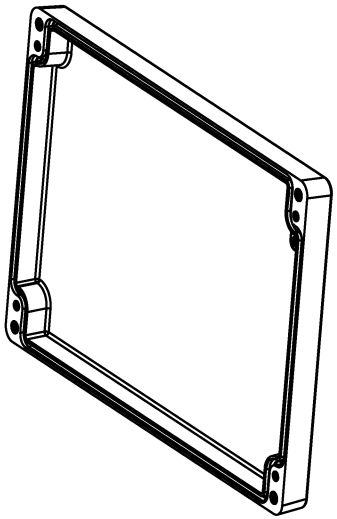

BASE

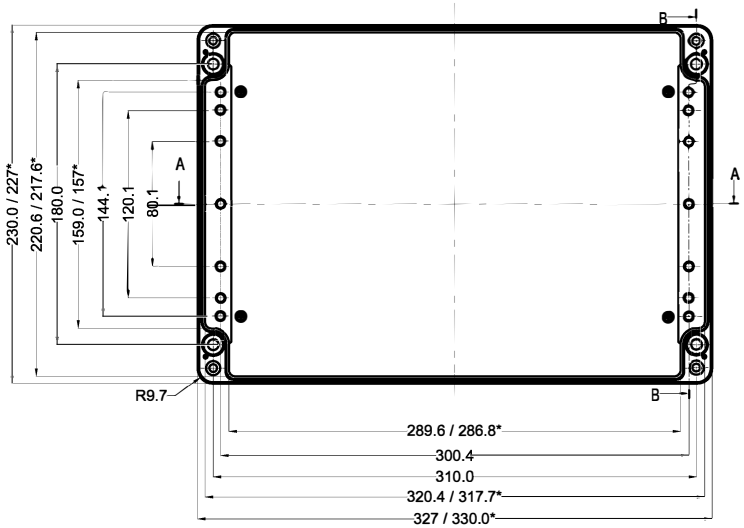

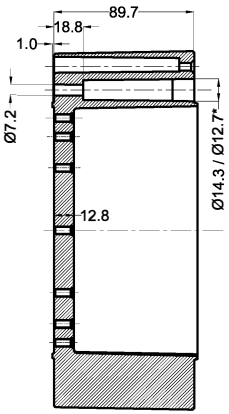

SECTION B-B

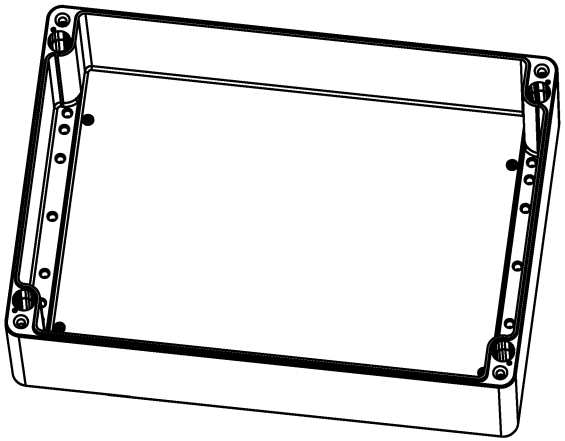

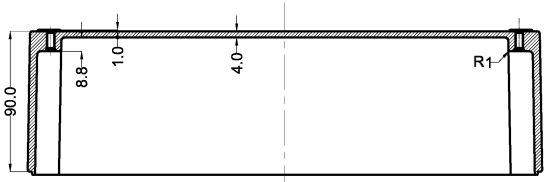

SECTION A-A

REV
0